TRINITY GLASS INTERNATIONAL
33615 1st Way S, Federal Way, WA 98003

L. F. SCHMIDT LICENSE No. 43409 STATE OF FLORIDA PROFESSIONAL ENGINEER

Digitally signed by Lyndon F Schmidt
Date: 2026.07.01 16:54:59 -04'00'

This item has been digitally signed and sealed by **L. F. Schmidt, P.E.** on the date adjacent to the seal.

Printed copies of this document are not considered signed and sealed and the signature must be verified on any electronic copies.

THIS PRODUCT APPROVAL IS VALID ONLY FOR THE STATE OF FLORIDA

TRANSOM / FIXED LITE

"NON-IMPACT"

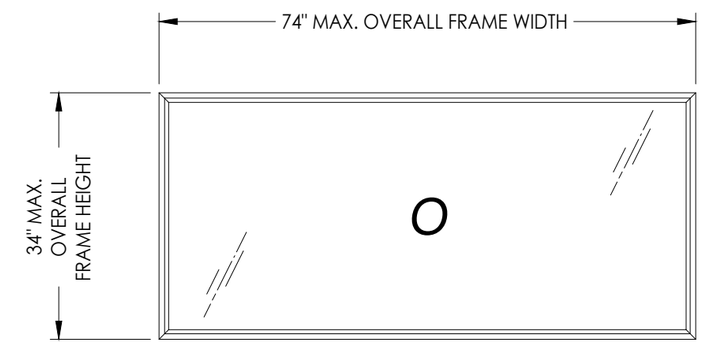

GENERAL NOTES

1. This product has been evaluated and is in compliance with the 9th Edition (2026) Florida Building Code (FBC) structural requirements excluding the "High Velocity Hurricane Zone" (HVHZ).
2. Product anchors shall be as listed and spaced as shown on details. Anchor embedment to base material shall be beyond wall dressing or stucco.
3. When used in areas requiring wind borne debris protection, this product is required to be protected with an impact resistant covering that complies with FBC Sections 1609.1.2 & R301.2.1.2.
4. For 2x stud framing construction, anchoring of these units shall be the same as that shown for 2x buck masonry construction.
5. Site conditions that deviate from the details of this drawing require further engineering analysis by a licensed engineer or registered architect.

OVERALL FRAME DIMENSION	OVERALL D.L.O. DIMENSION	GLASS TYPE	DESIGN PRESSURE (PSF)	
			POSITIVE	NEGATIVE
74" x 34"	71.3" x 31.3"	G1	+65.0	-65.0

TABLE OF CONTENTS

SHEET #	DESCRIPTION
1	Typical elevation, design pressures & general notes
2	Horizontal and vertical cross sections
3	Buck & frame anchoring
4	Bill of materials, glazing details & components

Documents Prepared By:
Lyndon F. Schmidt
P.E. No. 43409
RW BUILDING CONSULTANTS, INC.
P.O. Box 230, Valrico, FL 33595
Phone No.: 813.659.9197
FBPE Registry No. 9813

PRODUCT: TRINITY TRANSOM / FIXED LITE

PART OR ASSEMBLY: TYPICAL ELEVATION, DESIGN PRESSURES & GENERAL NOTES

REVISIONS

NO.	DATE		BY
2	7/01/26	UPDATE TO 9TH ED. (2026) FBC	LFS
1	7/31/23	UPDATE TO 8TH ED. (2023) FBC	LFS

DATE: 4/13/23
SCALE: N.T.S.
DWG. BY: LFS
CHK. BY: RW
DRAWING NO.: FL-5016.2
SHEET 1 OF 4

© 2023 R.W. BUILDING CONSULTANTS INC.

Z:\2023 FBC Drawings\Trinity Glass Int'l\FL-5016 R8\FL-5016.2.dwg

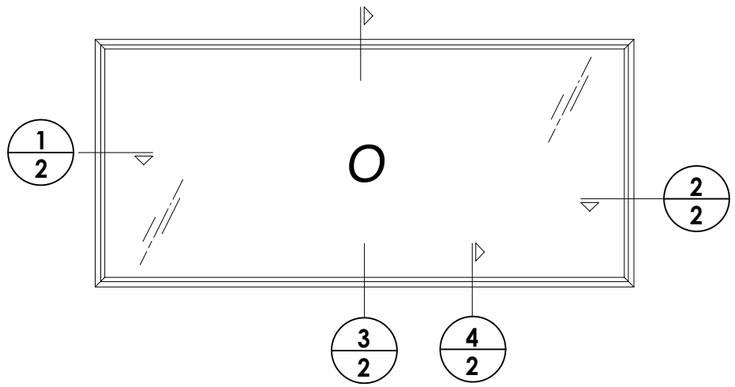

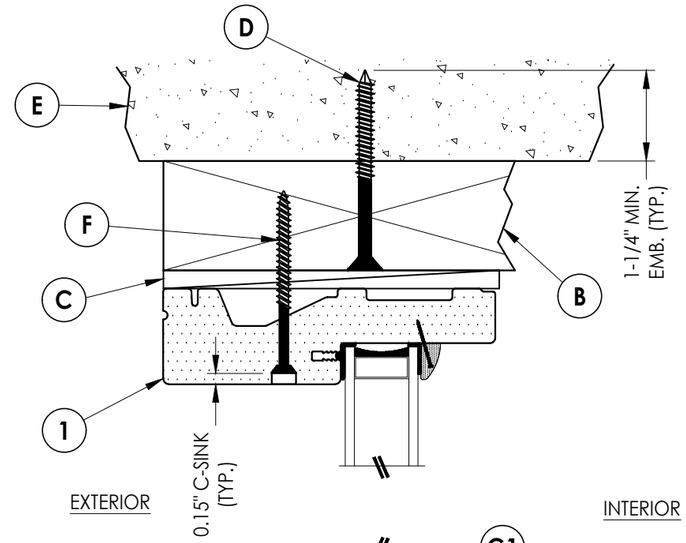

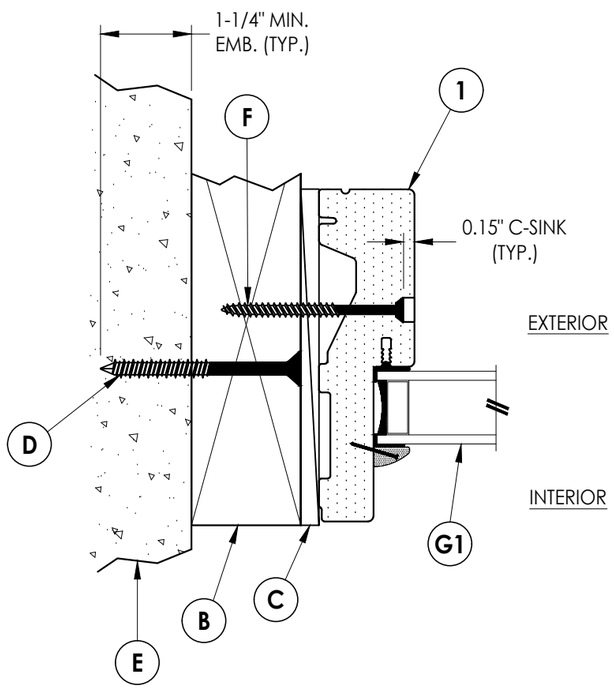

1/2 HORIZONTAL CROSS SECTION
2X Buck Construction

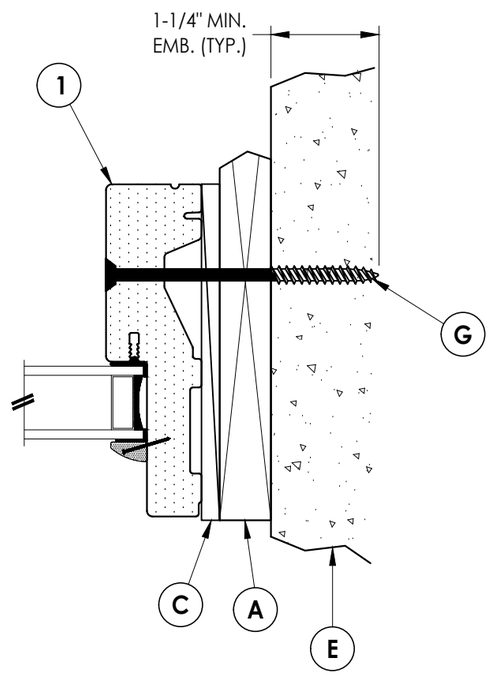

2/2 HORIZONTAL CROSS SECTION
1X Buck Construction

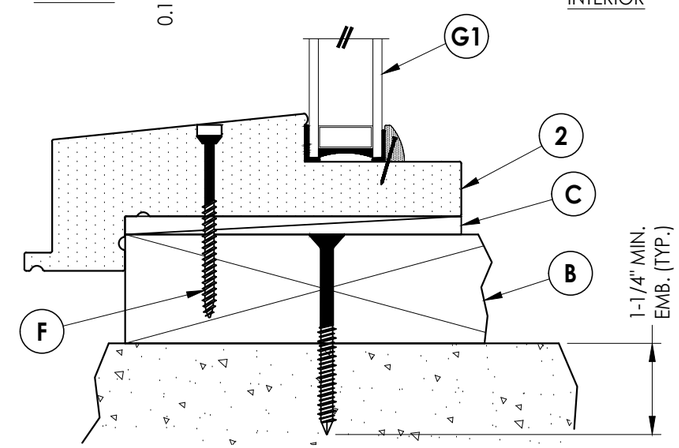

3/2 VERTICAL CROSS SECTION
2X Buck Construction

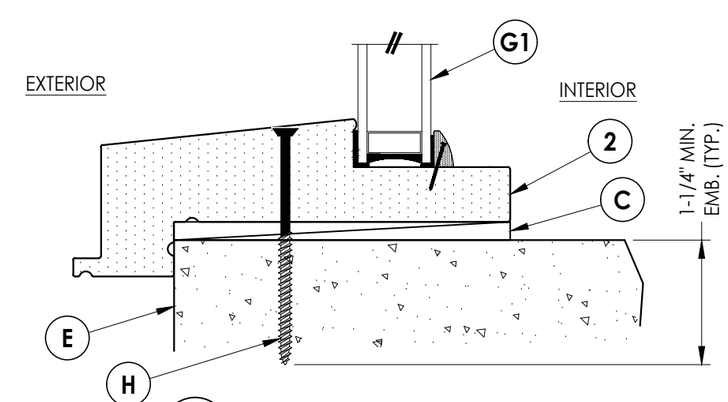

4/2 VERTICAL CROSS SECTION
Direct to Masonry

Documents Prepared By:
Lyndon F. Schmidt
P.E. No. 43409

RW BUILDING CONSULTANTS, INC.
P.O. Box 230, Valrico, FL 33595
Phone No.: 813.659.9197
FBPE Registry No. 9813

PRODUCT: TRINITY TRANSOM / FIXED LITE

PART OR ASSEMBLY: HORIZONTAL AND VERTICAL CROSS SECTIONS

NO.	DATE	REVISIONS	BY
2	7/01/26	UPDATE TO 9TH ED. (2026) FBC	LFS
1	7/31/23	UPDATE TO 8TH ED. (2023) FBC	LFS

DATE: 4/13/23
SCALE: N.T.S.
DWG. BY: LFS
CHK. BY: RW
DRAWING NO.: FL-5016.2
SHEET 2 OF 4

© 2023 R.W. Building Consultants Inc.

Z:\2023 FBC Drawings\Trinity Glass Int'l\FL-5016 R8\FL-5016.2.dwg

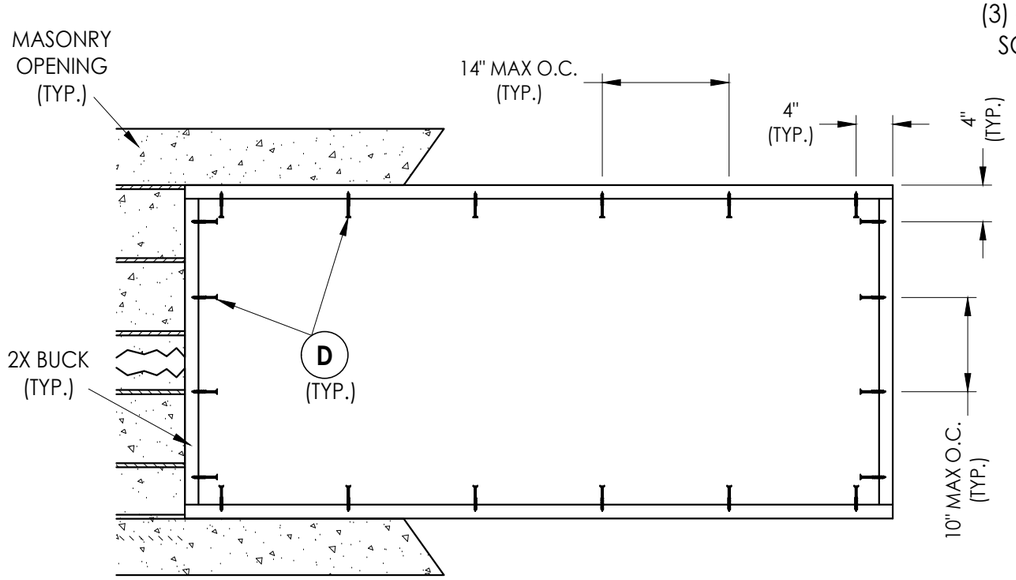

BUCK ANCHORING

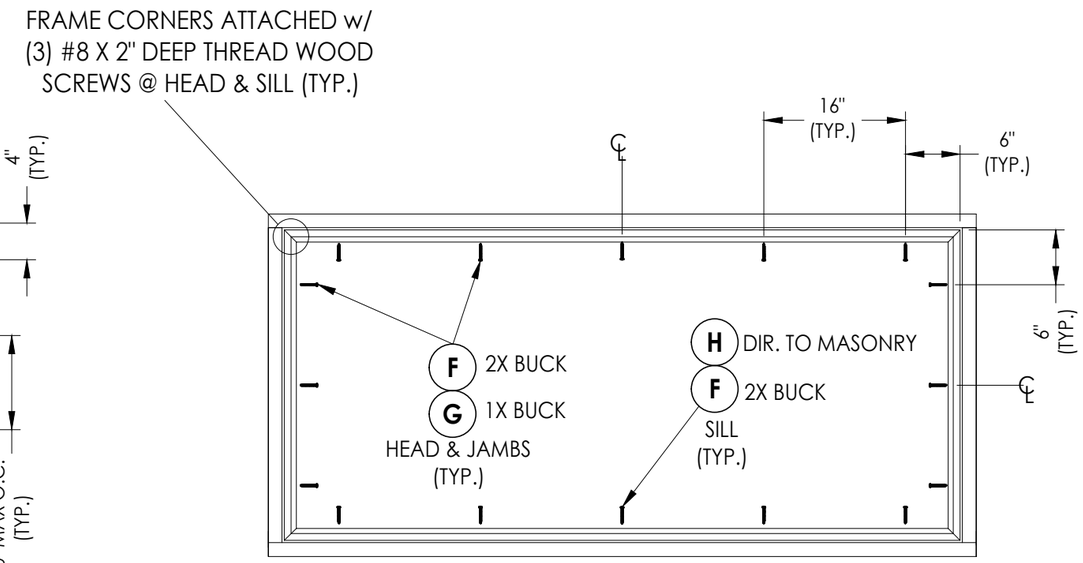

FRAME ANCHORING

Masonry construction

CONCRETE ANCHOR NOTES:

1. *Concrete anchor locations at the corners may be adjusted to maintain the min. edge distance to mortar joints.*
2. *Concrete anchor locations noted as "MAX. ON CENTER" must be adjusted to maintain the min. edge distance to mortar joints, additional concrete anchors may be required to ensure the "MAX. ON CENTER" dimension are not exceeded.*
3. *Concrete anchor table:*

ANCHOR TYPE	ANCHOR SIZE	MIN. EMBEDMENT	MIN. CLEARANCE TO MASONRY EDGE	MIN. CLEARANCE TO ADJACENT ANCHOR
ITW TAPCON®	1/4"	1-1/4"	2"	4"
DeWALT ULTRACON+®	1/4"	1-1/4"	1"	4"

WOOD SCREW INSTALLATION NOTES:

1. *Maintain a minimum 5/8" edge distance, 1" end distance, & 1" o.c. spacing of wood screws to prevent the splitting of wood.*

Documents Prepared By:
Lyndon F. Schmidt
P.E. No. 43409
RW BUILDING CONSULTANTS, INC.
P.O. Box 230, Valrico, FL 33595
Phone No.: 813.659.9197
FBPE Registry No. 9813

PRODUCT: *TRINITY TRANSOM / FIXED LITE*

PART OR ASSEMBLY: *BUCK & FRAME ANCHORING*

NO.	DATE	REVISIONS	BY
2	7/01/26	UPDATE TO 9TH ED. (2026) FBC	LFS
1	7/31/23	UPDATE TO 8TH ED. (2023) FBC	LFS

DATE: 4/13/23
SCALE: N.T.S.
DWG. BY: LFS
CHK. BY: RW
DRAWING NO.: FL-5016.2
SHEET 3 OF 4

© 2023 R.W. Building Consultants Inc.

Z:\2023 FBC Drawings\Trinity Glass Int'l\FL-5016 R8\FL-5016.2.dwg

BILL OF MATERIALS

ITEM #	DESCRIPTION	MATERIAL
A	1X BUCK (G = 0.42)	WOOD
B	2X BUCK (G = 0.42)	WOOD
C	1/4" MAX. SHIM SPACE	-
D	1/4" X 2-3/4" PFH DeWALT OR ITW CONCRETE SCREW	STEEL
E	MASONRY - 3,000 PSI MIN. CONCRETE CONFORMING TO ACI 301 OR HOLLOW BLOCK CONFORMING TO ASTM C90	CONCRETE
F	#10 X 2-1/2" PFH WOOD SCREW (1.15" MIN. EMBEDMENT)	STEEL
G	1/4" X 3-3/4" PFH ITW CONCRETE SCREW	STEEL
H	1/4" X 3-1/4" PFH ITW CONCRETE SCREW	STEEL
1	PVC HEAD & JAMBS	PVC
2	PVC SILL	PVC
3	GLAZING BEAD	PVC

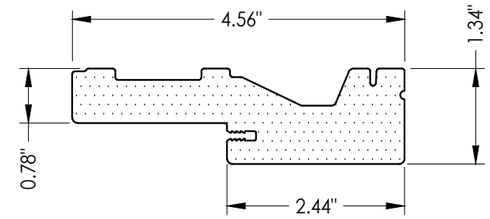

1 **PVC HEAD & JAMBS**

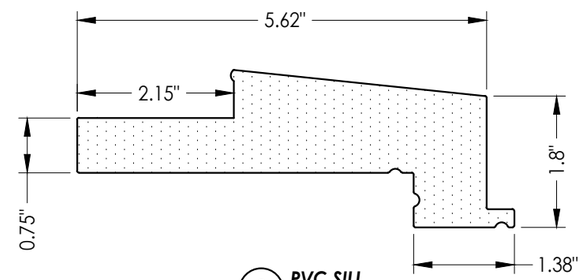

2 **PVC SILL**

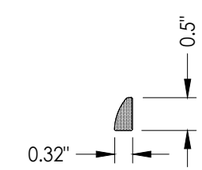

3 **GLAZING BEAD**

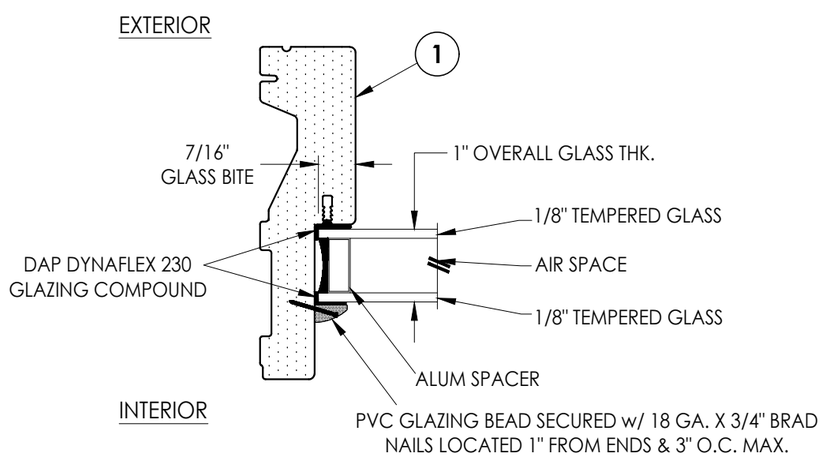

G1 **GLAZING DETAIL**
Transom

Documents Prepared By:
Lyndon F. Schmidt
P.E. No. 43409

RW BUILDING CONSULTANTS, INC.
P.O. Box 230, Valrico, FL 33595
Phone No.: 813.659.9197
FBPE Registry No. 9813

PRODUCT: TRINITY TRANSOM / FIXED LITE

PART OR ASSEMBLY: BILL OF MATERIALS, GLAZING DETAIL & COMPONENTS

REVISIONS

NO.	DATE		BY
2	7/01/26	UPDATE TO 9TH ED. (2026) FBC	LFS
1	7/31/23	UPDATE TO 8TH ED. (2023) FBC	LFS

DATE: 4/13/23
SCALE: N.T.S.
DWG. BY: LFS
CHK. BY: RW
DRAWING NO.: FL-5016.2
SHEET 4 OF 4

© 2023 R.W. Building Consultants Inc.

Z:\2023 FBC Drawings\Trinity Glass Int'l\FL-5016 R8\FL-5016.2.dwg